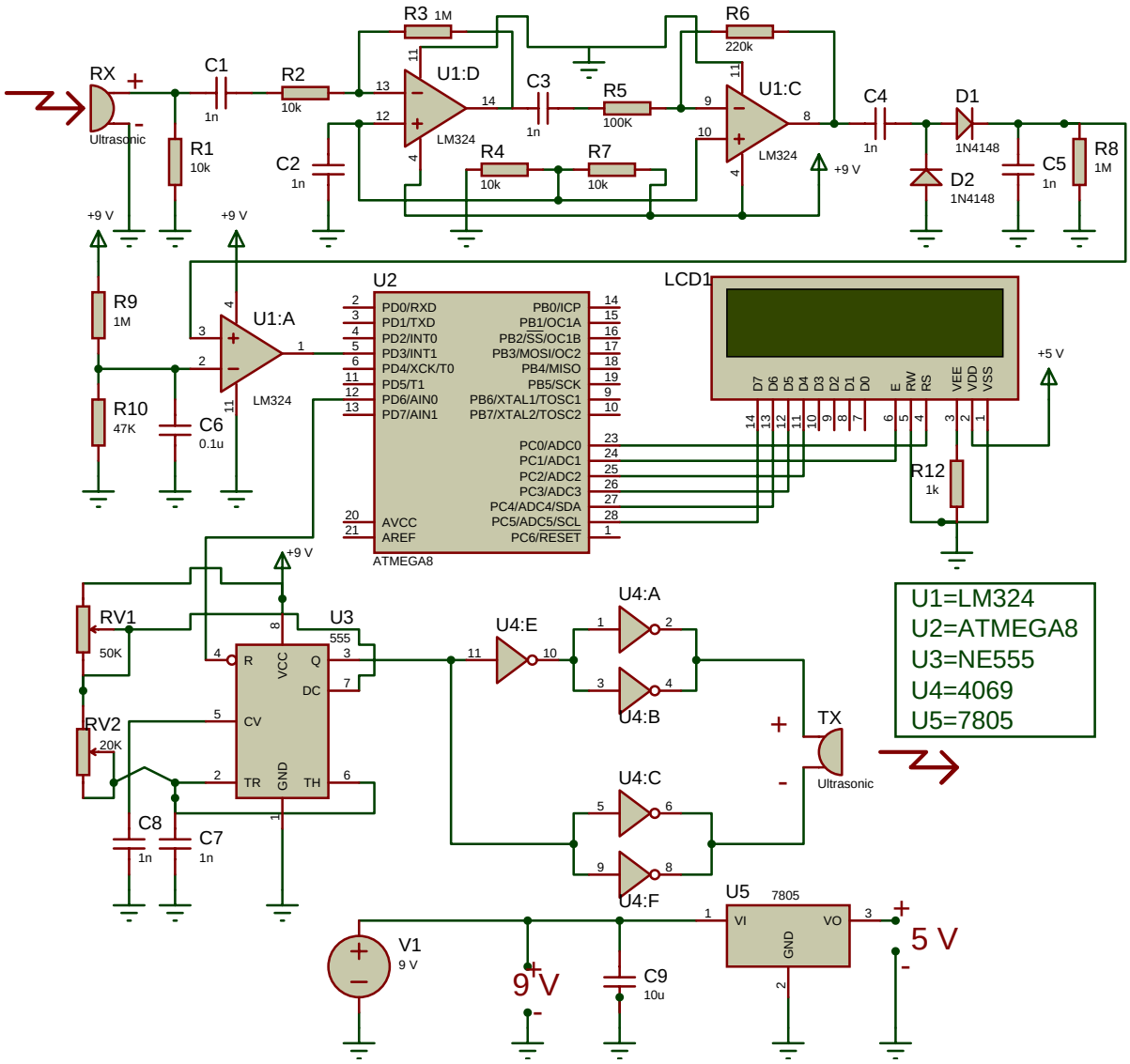
RX
Ultrasonic
C1
1n
R1
10k
R2
10k
R3 1M
U1:D
LM324
C2
1n
C3
1n
R4
10k
R5
100K
R7
10k
R6
220k
U1:C
LM324
+9 V
C4
1n
D1
1N4148
D2
1N4148
C5
1n
R8
1M
R9
1M
R10
47K
C6
0.1u
U1:A
LM324
U2
ATMEGA8
PD0/RXD
PD1/TXD
PD2/INT0
PD3/INT1
PD4/XCK/T0
PD5/T1
PD6/AIN0
PD7/AIN1
PB0/ICP
PB1/OC1A
PB2/SS/OC1B
PB3/MOSI/OC2
PB4/MISO
PB5/SCK
PB6/XTAL1/TOSC1
PB7/XTAL2/TOSC2
PC0/ADC0
PC1/ADC1
PC2/ADC2
PC3/ADC3
PC4/ADC4/SDA
PC5/ADC5/SCL
PC6/RESET
AVCC
AREF
LCD1
D7 D6 D5 D4 D3 D2 D1 D0 E RW RS VEE VDD VSS
+5 V
R12
1k
RV1
50K
RV2
20K
U3
555
R VCC Q DC CV TR GND TH
C8
1n
C7
1n
U4:E
U4:A
U4:B
U4:C
U4:F
TX
Ultrasonic
U1=LM324
U2=ATMEGA8
U3=NE555
U4=4069
U5=7805
U5
7805
VI VO GND
V1
9 V
9 V
C9
10u
5 V